NO	PART NAME	MATERIAL	Q'TY	REMARK
1				

DWG. NOPD0000-100-B

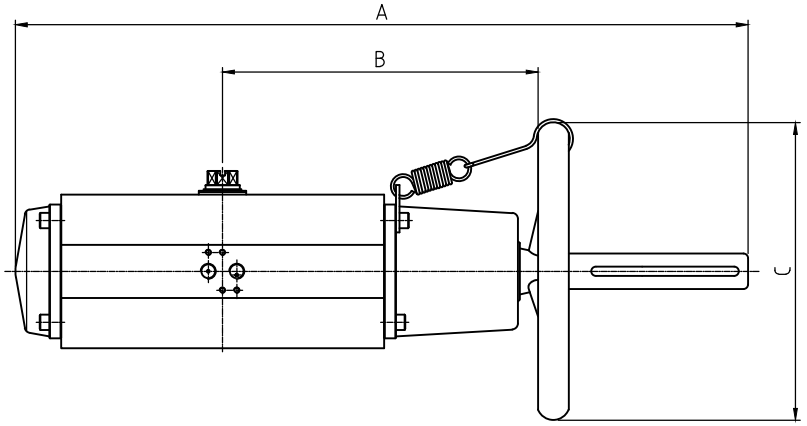

DOUBLE ACTING TYPE

MODEL	A	B	C
PD50	280	150	ø110
PD70	370	185	ø160
PD85	460	235	ø200
PD100	510	285	ø250
PD125	620	350	ø250
PD140/160	780	430	ø400
PD200	900	460	ø500

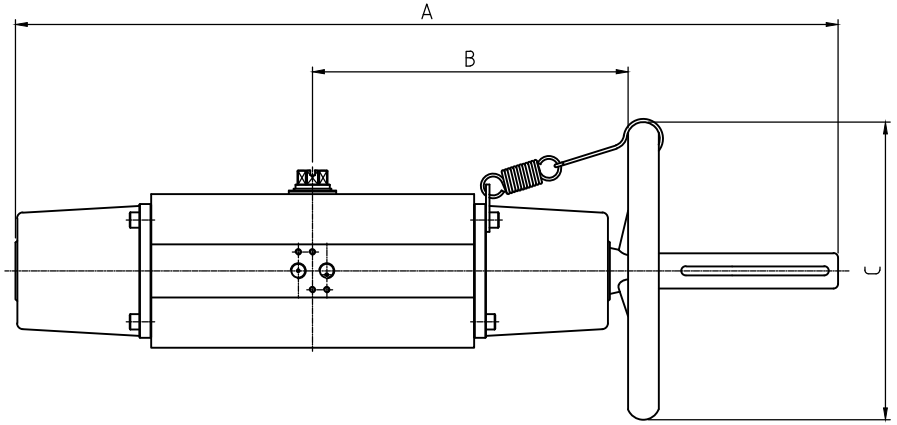

SPRING RETURN TYPE

MODEL	A	B	C
PS50	310	150	ø110
PS70	410	185	ø160
PS85	520	235	ø200
PS100	585	285	ø250
PS125	720	350	ø250
PS140/160	900	430	ø400
PS200	1050	460	ø500

NOTE

1. 날카로운 모서리 제거 할 것.

APPLICATION

UNLESS OTHERWISE SPECIFIED			
CLASS.\GR.	1ST G	2ND G	3RD G
0.5 – 6	0.05	0.1	0.2
6 – 30	0.1	0.2	0.3
30 – 120	0.15	0.3	0.8
120 – 315	0.2	0.5	1.2
315 – 1000	0.3	0.8	2.0
1000 – 2000	0.5	1.2	3.0
GENERAL TOL.			
ANG. TOL.	GEN. CH. 0.5		

MATERIAL	
ALT. MAT.	
HEAT TREAT.	
SURF. TRET.	

PROJ.	SYM	ECN NO	CHANGES		DATE	SIGN	APPR.
DRAW J.H.JANG	SCALE 1/3	ISSU. DEPT. R&D	PART NAME HAND WHEEL				
DESIGN J.H.JANG	DIM. mm	DATE 2015.10.24					
CHECK			DWG. NO PD0000-100-B				
APPR.			1 OF 1 SHEET	DWG. SIZE A2			